G3000 Fog Effects Generator

Operator's Manual

ultratec special effects ™

www.ultratecfx.com

VER. 04.11.12

Table of Contents

Introduction **3**
Microprocessor Control 3
Water Base Fog Technology 3
Warning **3**
Important Safety Instructions: 3
Safety Precautions **3**
Technical Specifications **4**
Technical Drawings 4
Operating Procedure **5**
Digital Remote Control **5**
G3000 Screen Shots 7
DMX Operation **9**
Other Features **9**
Remote Extension 9
Fluid Level Detection 9
Maintenance **9**
Exterior 9
Heat exchanger 9
Recommended Fluids **10**
Maintenance Fluid 10
Warranty **11**
Contact Information **11**

Note: Please read entire manual before operating the G3000 Fog Effects Generator

Introduction

The G3000 Fog Effects Generator is a Microprocessor Controlled, Water Based Fog generating system.

Microprocessor Control

The G3000 features dual microprocessor control. From temperature regulation to taper back flow control, all of the functions are monitored and processed by the two on-board processors.

Water Base Fog Technology

Water Base Fog technology is achieved by pumping a glycol/water mixture through a heat exchanger. This will vaporize the fluid as it passes through the processing block. The vaporization of the fluid forces the hot mixture through the output nozzle. When mixed with ambient air, it forms an opaque aerosol (fog). The fog is made up of tiny droplets that form around small particles in the air. The suspended droplets refract the light, allowing the fog to take on the color of the light illuminating it.

Warning

Important Safety Instructions:

1. Do not touch, place hands or expose skin within 20" (50 cm) of the discharge nozzle.
2. Do not remove the outer case.
3. Persons suffering from asthma or allergenic sensitivity may experience irritation, discomfort or allergic symptoms when exposed to fog effects.
4. Ensure that this unit is grounded at all times. Failure to do so may result in serious injury.
5. Use Ultratec Special Effects fluid **ONLY.**

Safety Precautions

1. Ensure that any operation of the machine is supervised by suitably trained and authorized personnel.
2. Do not modify the machine or use a machine which has been damaged in any way.
3. Allow sufficient air circulation around the machine at all times.
4. Protect the machine from direct weather effects and wet locations.
5. Only use fluids manufactured by Ultratec Special Effects.
6. Do not continue to produce fog when visibility is reduced to 20" 50cm or below.
7. Avoid directing fog output continuously at people, structures or objects within close proximity of the discharge nozzle.
8. Ensure that adequate exhausting arrangements are available in the event of an emergency.
9. Do not place hands or exposed skin within the first 20" (50 cm) of the discharge nozzle at any time during fog production.
10. Fog effects can trigger smoke alarms and detectors. Please take suitable precautions to prevent false alarms.

Technical Specifications

Model:	G3000 Fog Effects Generator	
Part Number:	CLF 3000 - G3000 Fog Machine / 120 Volt CLF-3001 - G3000 Fog Machine / 120 Volt - w/ Air Option CLF-3002 - G3000 Fog Machine / 120 Volt - w/ Industrial Option CLF-3003 - G3000 Fog Machine / 220-240 Volt CLF-3004 - G3000 Fog Machine / 220-240 Volt - w/ Industrial Option CLF-3006 - G3000 Fog Machine / 220-240 Volt - w/ Air Option CLF-3007 - G3000 Fog Machine / 120 Volt - w/ Show Control CLF 3008 - G3000 Fog Machine / 105 Volt	
Length:	25.38in	59.37cm
Width:	10.5in	26.67cm
Height:	10.63in	66.98cm
Net Weight:	52lbs	24kg
Power Rating:	120 Volt A.C. 50/60 Hz. 17 Amps. 240 Volt A.C. 50/60 Hz. 9 Amps.	
Fluid:	Water Base Fog Fluid (Use only Ultratec Fluid)	
Features:	2000w Dual Core Heating Block	

Technical Drawings

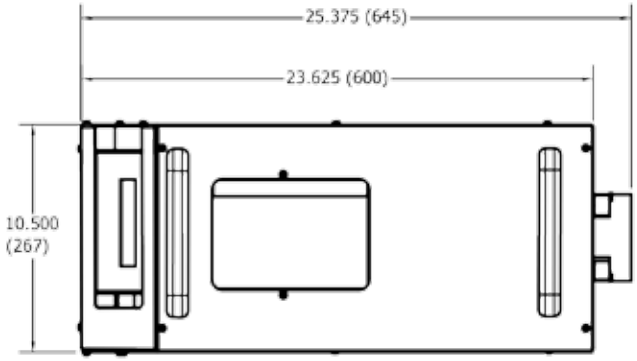

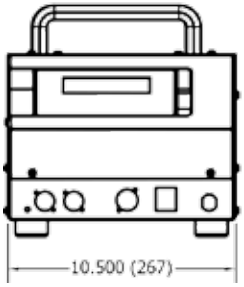

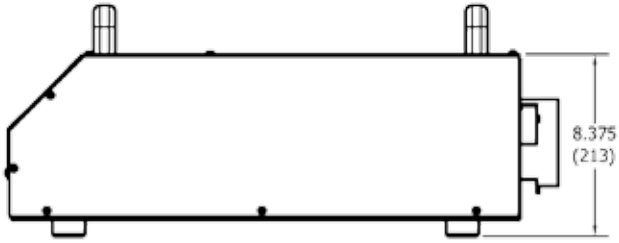

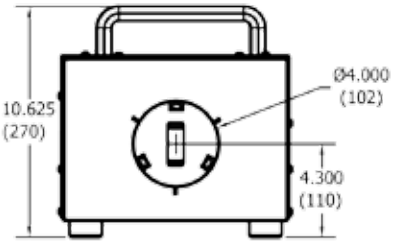

Operating Procedure

1. The fog machine must be connected to a sine wave voltage supply of 20 Amps free of electrical interference.
2. Open a 4 Litre (1 Gallon) container of Ultratec Special Effects fog fluid and insert the fluid pickup tube into the spout of the fluid container.
3. Turn ON the Power switch located on the rear panel. The Power switch will illuminate to indicate the presence of power.
4. After approximately 9 minutes, the fog machine will be fully heated and ready for full output.
5. Set the demand from 1 to 100% using the built-in remote control or through a DMX control network.

Valid DMX Light | *DMX In* | *DMX Out* | *LSG Receptacle (2 amps)* | *On/Off Switch*

Digital Remote Control

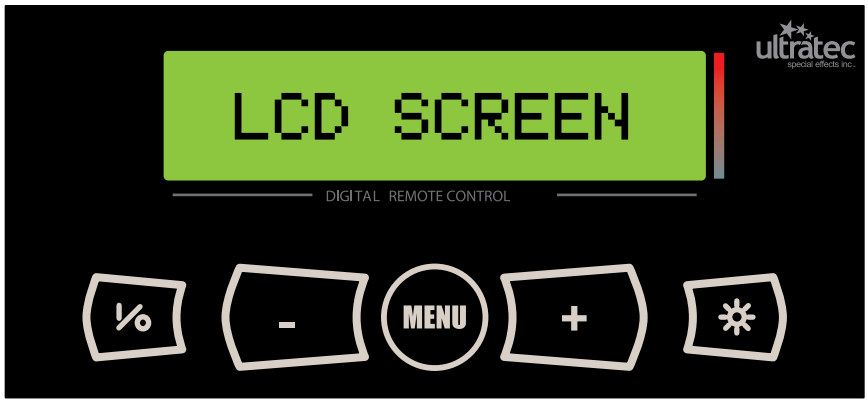

Diagnostics Screen Button
Press "Menu" to exit
(For Service Technician)

Fog On/Off | *Value Down (-)* | *Cycle Menus* | *Value Up (+)* | *Toggle LCD Brightness*

Write to Memory

When variables are changed on the digital remote they are written to memory after 60 seconds or when you change screens. The secondary displays return to the main menu if inactive for 60 seconds.

D=DEMAND; This value represents the user's requested fog output level from 1-100%

A=ACTUAL; This value represents the current level of fog output in relation to DEMAND due to cooler block temperatures.

REM = Fog machine is controlled currently by the remote

Fog = Machine is generating fog. WIll read "Fog Off" when currently not generating fog.

```
REM   D100 A100
Fog   0:00 FHR
```

TEMPERATURE BAR Displays the block temperature.

Displays the Cycle On Time, Cycle Off Time, and LSG Pre-Fog Time

R = RELAY; R appears when the G3000 is powering the LSG receptical.

H = HEATING; H will display when the blocks are heating up. H will disappear when block is heated to desired temp.

F = LOW FLUID DETECTION; F will display when sensor detects low fluid. Machine will continue to run or can be set to shut off when sensor activates.

DMX=Fog machine is controlled through DMX. Remote bypassed.

DMX Address

```
DMX
511
```

```
CYCLE ON TIME
  0:00 (mm:ss)
```

Set the desired time for the fog machine to run, using the "+" or "-" buttons. (0-10 Minutes)

```
CYCLE OFF TIME
  0:00 (mm:ss)
```

Set the desired time for the fog machine to stop, using the "+" or "-" buttons. (0-30 Minutes)

```
LSG PRE-FOG TIME
  0:00 (mm:ss)
```

When connected to an LSG, set the desired time for the LSG to purge the CO2 line before the G3000 begins to produce fog. (0-2 Minutes)

```
DMX Address: 511
Data    0 D+1    0
```

Using the "+" or "-" buttons select the desired valid DMX address. (0-511)
Data = fog rate controlled 0-100%,
DMX+1=LSG power on above 50%.

0-255

0-255
128 - Relay

G3000 Screen Shots

Machine turned on warming up with no DMX input. Note temperature bar graph shows low, Heater "H" is on and fog is turned off DMX is unplugged and DMX LED (bottom left) is not on.

Note error from trying to turn on machine that is not yet hot enough.

Machine on with remote. Not fully heated (see temp bar and H is on) so requesting 100% but getting 27%.

Machine warming up with DMX attached. Note "DMX" on screen with dmx address show below set at channel 1. Note valid DMX red LED now on (lower left).

Machine on with DMX. Machine was fully heated (note bar graph) but heater starts for 100% Actual flow.

Menu screens for timer on/off function with remote control only. DMX control ignores these setting.

If set the Fog output stops when fluid gets low (F indicator on main screen).

DMX address selection screen. This shows DMX set to channel 1. Channel 1 data is 58 (0-255) channel 2 is 11.

HIDDEN MENUS

If set the Fog output stops when fluid gets low (F indicator on main screen).

Code versions for remote, output control, DMX.

Power up starting (use not recommended)

DMX Operation

The G3000 is equipped with DMX control as a standard feature.

1. Attach a DMX signal to the DMX IN 5 pin connector on the rear of the unit. For good DMX practice, a terminator is used on the DMX OUT connector.
2. Select a valid DMX address on the digital remote. Data = fog rate controlled 0-100%, DMX+1=LSG power turns on above 50%.
3. Valid DMX LED is on solid if good DMX signal is present. DMX control overrides the digital remote. Slow or irregular flashing indicates a poor DMX signal.

Other Features

Remote Extension

The digital remote control can be undocked from the machine and extended by the supplied 25' cord. This can be extended to 200'.

With the power off, press the tab located at the remote port left of the remote control. While pressing, pull the remote out of the dock and attach the cord.

Fluid Level Detection

The G3000 is manufactured with an Electronic Fluid Level Detection to warn the user when the fluid has reached a low level. This information is fed to the digital remote control where it displays "F" when the fluid level becomes low. The machine will still run when the sensor detects low fluid. The machine can be set to shut down on the "Low Fluid Stop" screen so it will not run dry.

Maintenance

Exterior

The casing of the G3000 is stainless steel with a powder paint coating. To clean simply wash with mild soap and warm water.

Heat exchanger

Using high quality Ultratec fluid should result in a long heat exchanger life. (See warranty policy later in this manual).

Note: Cleaning/Rapid Change procedure can be found in the G3000 Service Manual located at:

www.ultratecfx.com

Recommended Fluids

Director's Choice Fog Fluid: The choice of professionals. Director's Choice creates a cloud of fog with a medium hang time while remaining clean, white, dry, and odorless.

Pro Beam Long Lasting Fog Fluid: With a hang time 2-3x greater than the Director's Choice Fog Fluid, the Pro Beam solution produces a slightly less white fog while remaining clean, dry, and odorless.

Quick Dissipating Fog Fluid: This fast dissipating fluid is great for applications or effects that require quick dissipation of fog. It produces excellent steam effects that resemble nitrogen bursts and it also keeps low-lying fog from rising too quickly when it is used with the LSG or LSX.

Extra Quick Dissipating Fog Fluid: Dissipates 2x the rate of Quick Dissipating Fog Fluid while maintaing similar characteristics.

Molecular Fog Fluid: A faster dissipation versus the Director's Choice Fog Fluid. This thick, clean, white fog is an optimal solution for a dense low-lying fog effect when chilled with the LSG or LSX machines.

Party Fog Fluid: Quality fog fluid on a budget. An excellent solution for Djs, Nightclubs, Haunted Houses etc., looking to enhance light beams and creating various smoke effects.

Maxi Fog Fluid: The perfect balance between price and performance. Maxi Fog is the ideal solution for those who require high volume without compromise.

Maintenance Fluid

EZ Kleen Preventative Maintenance Fluid: Using EZ Kleen preventative maintenance fluid on a regular basis ensures longer life for the heat exchanger in Ultratec fog machines by reducing blockage.

All of our Fog Fluids are water based. Damage will occur if Haze Fluid is used in the G3000.

Warranty

Warranty:	Hardware products come with a one year warranty on parts and labor. Unless stated otherwise, this will refer to manufacturer defects only. All warranty is based on destination of the original sale. Any additional costs incurred are the responsibility of the Dealer and/ or the customer. Abuse or poor maintenance is not accepted. Proof of purchase or proof of sale must always accompany all warranty returns. An RA (Return Authorization) number must be noted on the outside of each box being returned to our facility. Any package(s) without an RA number clearly marked, will not be accepted by our receiving department. Freight on warranty items are freight prepaid to our facility and we will prepay freight back to your facility following repair. This will be done by the most economical means available. Should you require the item express-returned, the dealer is responsible for request indication and any difference in freight cost. Export Distributors are required to carry out the warranty repair, parts will be supplied by Ultratec.
Return Policy:	Return of any product must be done within 30 days of purchase. The package must be returned freight prepaid and the RA number clearly marked on the outside of the box.
Warning:	Ultratec Special Effects considers all of it's product to be safe for use in the application it was intended. Ultratec Special Effects takes no responsibility for misuse or incorrect use. Always refer to the Product Manual for proper use.

Contact Information

Head Office
Ultratec Special Effects
1960 Blue Heron Drive
London, Ontario N6H 5L9

Direct: 519-659-7972
Toll Free: 866-534-5557
Fax: 519-659-7713

Europe Office
Ultratec Special Effects GmbH
Dieselstrasse 30-40
60314
Frankfurt am Main
Germany

Direct: 49-69-87-000-1850
Fax: 49-69-87-000-1899

Canadian Shipping Address
(For All Canadian Repairs)
Ultratec Special Effects
1960 Blue Heron Drive
London, Ontario N6H 5L9

USA Shipping Address
(For All USA Repairs)
Ultratec Special Effects
640 Gadson Street
Groveland, Florida 34736

Please remember to include the **RA Number on all items being shipped for repairs.**

To retrieve an RA Number visit www.ultratecfx.com and click on the "Service" section. Then click on "Return Authorization Request" which is located on the left hand side of the page.

If you have any questions or require assistance please contact service at 519-951-3357/866-534-5557 or by email at Service@Ultratecfx.com.